POWER SUPPLY

MIDTERM PROJECT

prepared by:

Gyro A. Madrona

Electronics Engineer

GRADING SYSTEM

FINAL GRADE

30%

PRELIM

30%

MIDTERM

40%

ENDTERM

100%

LABORATORY

PENALTY

0

ABSENT

3

45-min LATE

7 max

15-min LATE

TOPIC OUTLINE

Power Control Setup

Power Supply

POWER CONTROL

SCHEMATIC AND WIRING DIAGRAM

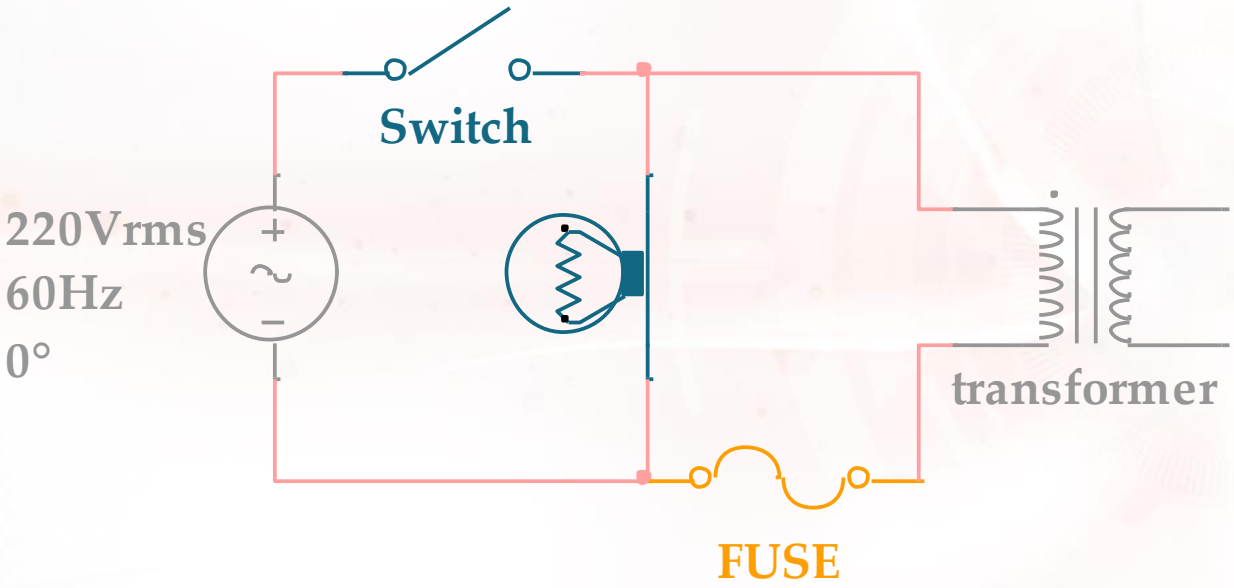

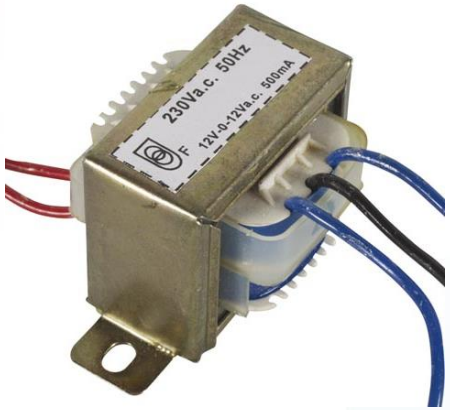

PARTS LIST

Qty	Description
1 pc	Plastic Case
1 pc	12-0-12 1A Transformer
1 pc	AC Cord + AC Socket + Robber Grommet
1 pc	Fuse Holder + Fuse
1 pc	AC Switch w/ Lamp
2 pcs	½" Bolts and Nuts
1 pc	Shrinkable Tube * for #22AWG wire * for AC Switch

Plastic Case

CHASSIS LAYOUT

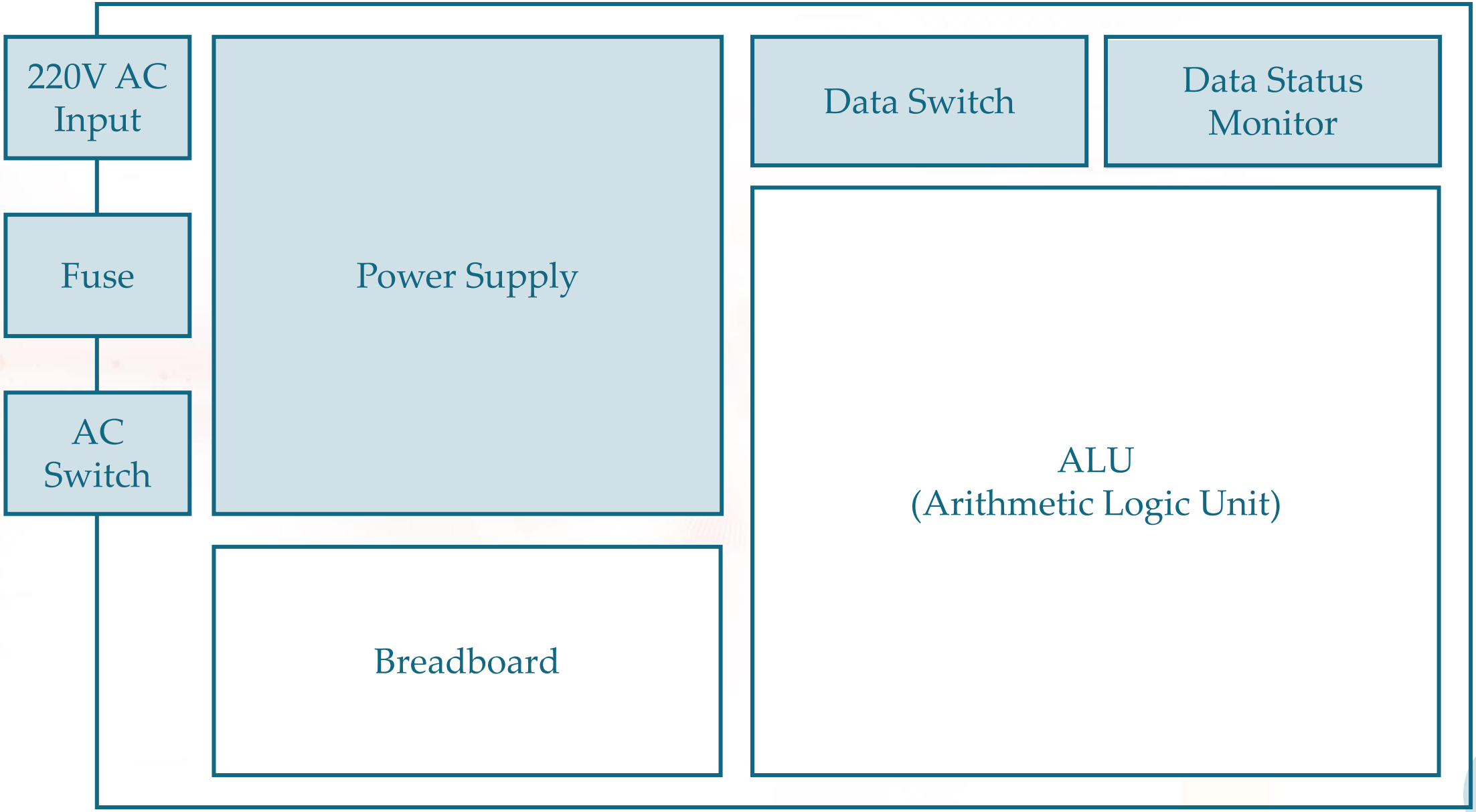

POWER SUPPLY

BLOCK DIAGRAM

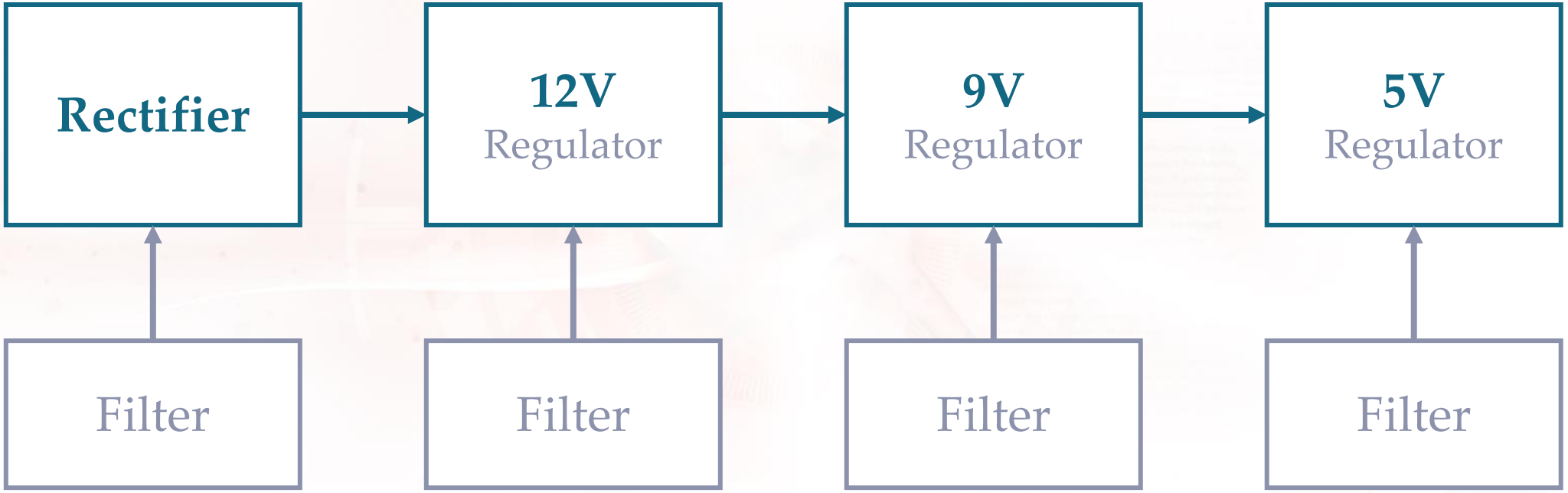

SCHEMATIC DIAGRAM

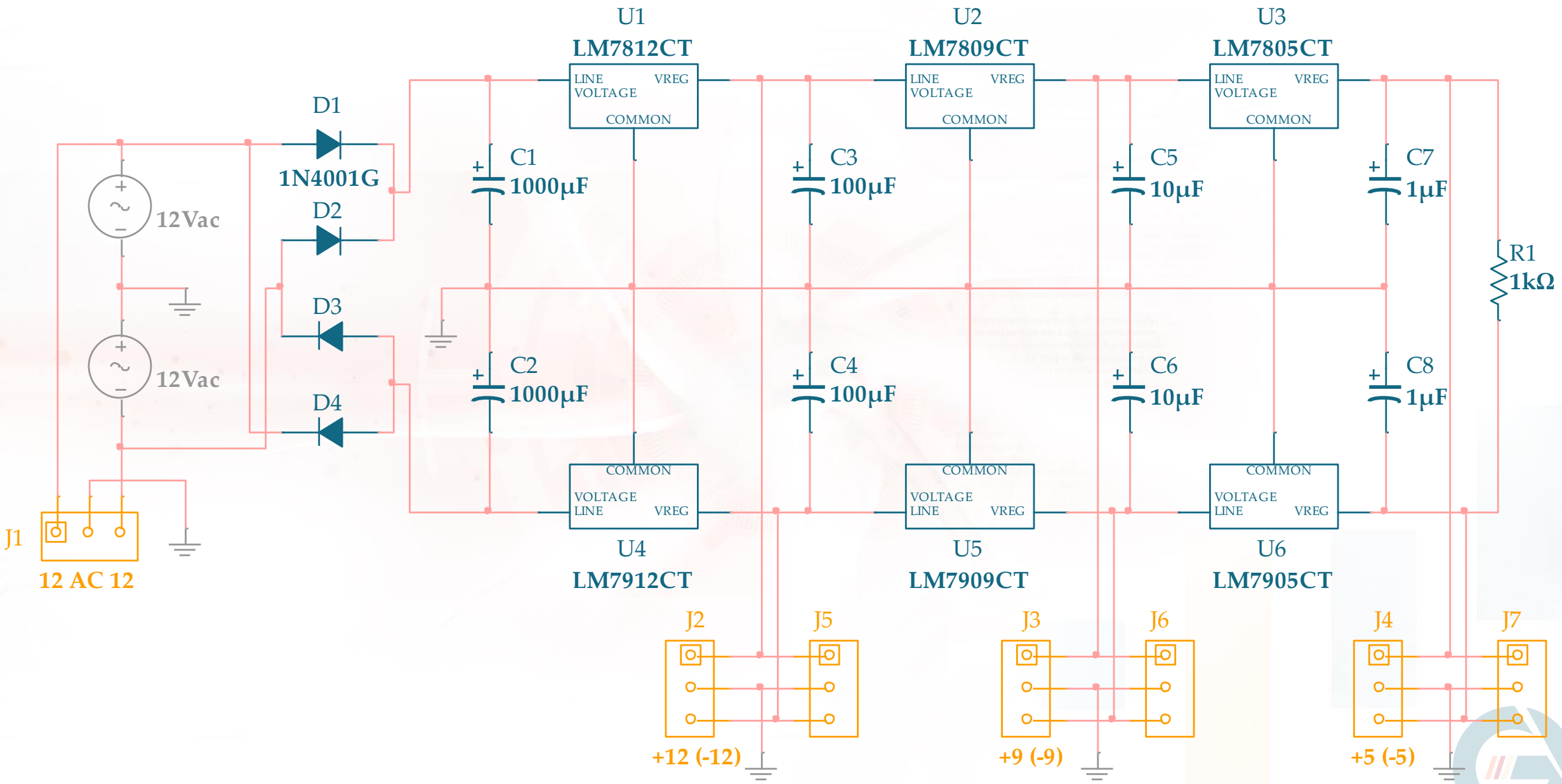

PARTS LIST

Qty	Description
4 pcs	1N4001 Rectifier Circuits
1 pc	7812 Regulator + Heatsink
1 pc	7912 Regulator + Heatsink
1 pc	7809 Regulator + Heatsink
1 pc	7909 Regulator + Heatsink
1 pc	7805 Regulator + Heatsink
1 pc	7905 Regulator + Heatsink
2 pcs	1000uF/16V Electrolytic Capacitor
2 pcs	100uF/16V Electrolytic Capacitor
2 pcs	10uF/50V Electrolytic Capacitor
2 pcs	1uF/50V Electrolytic Capacitor
1 pc	1K 1/2W Carbon Resistor
21 pins	Vertical Pin Strip (Male)
20 pcs	1″ Bolts and Nuts

SCHEMATIC DIAGRAM

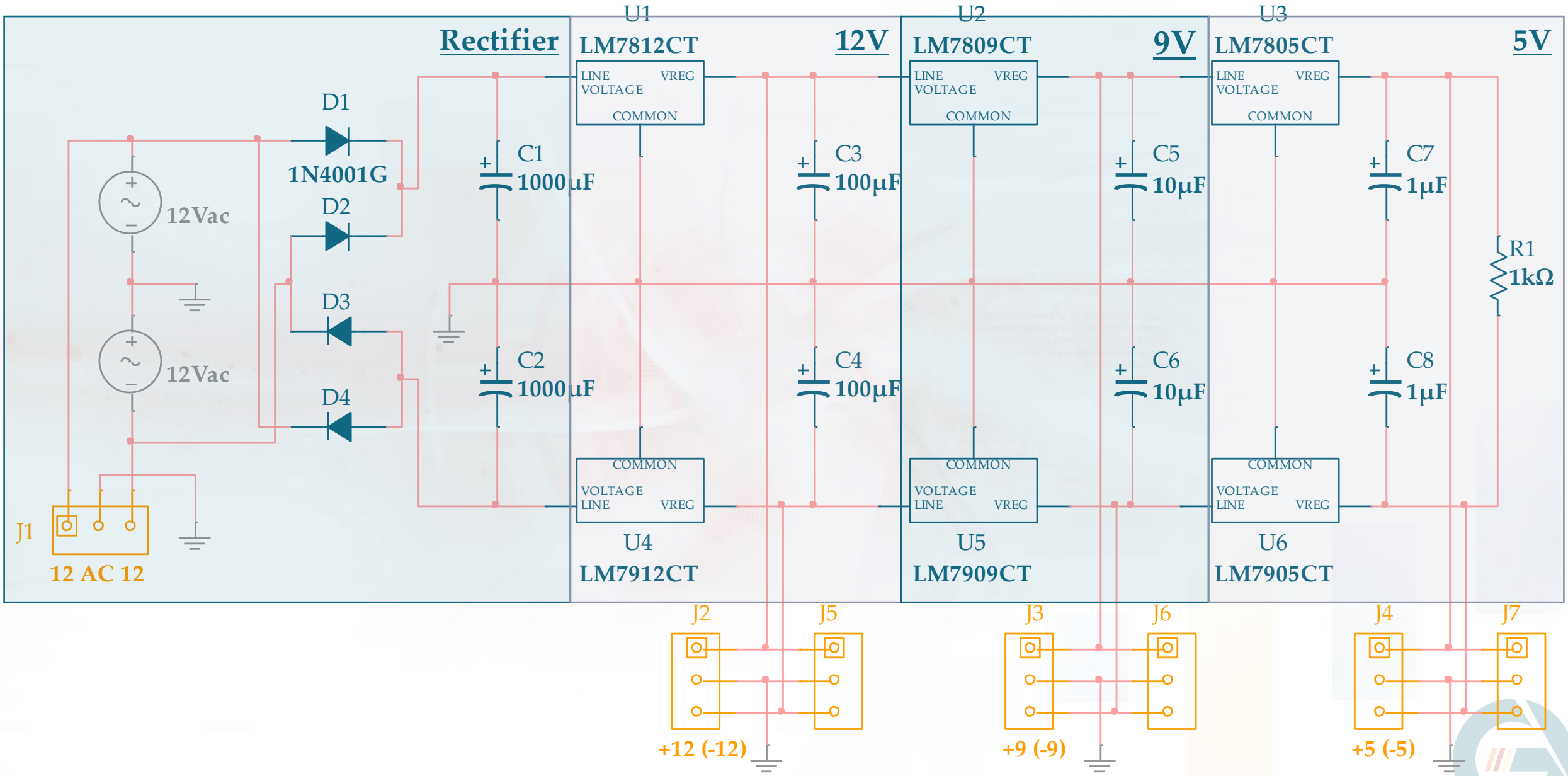

PCB LAYOUT

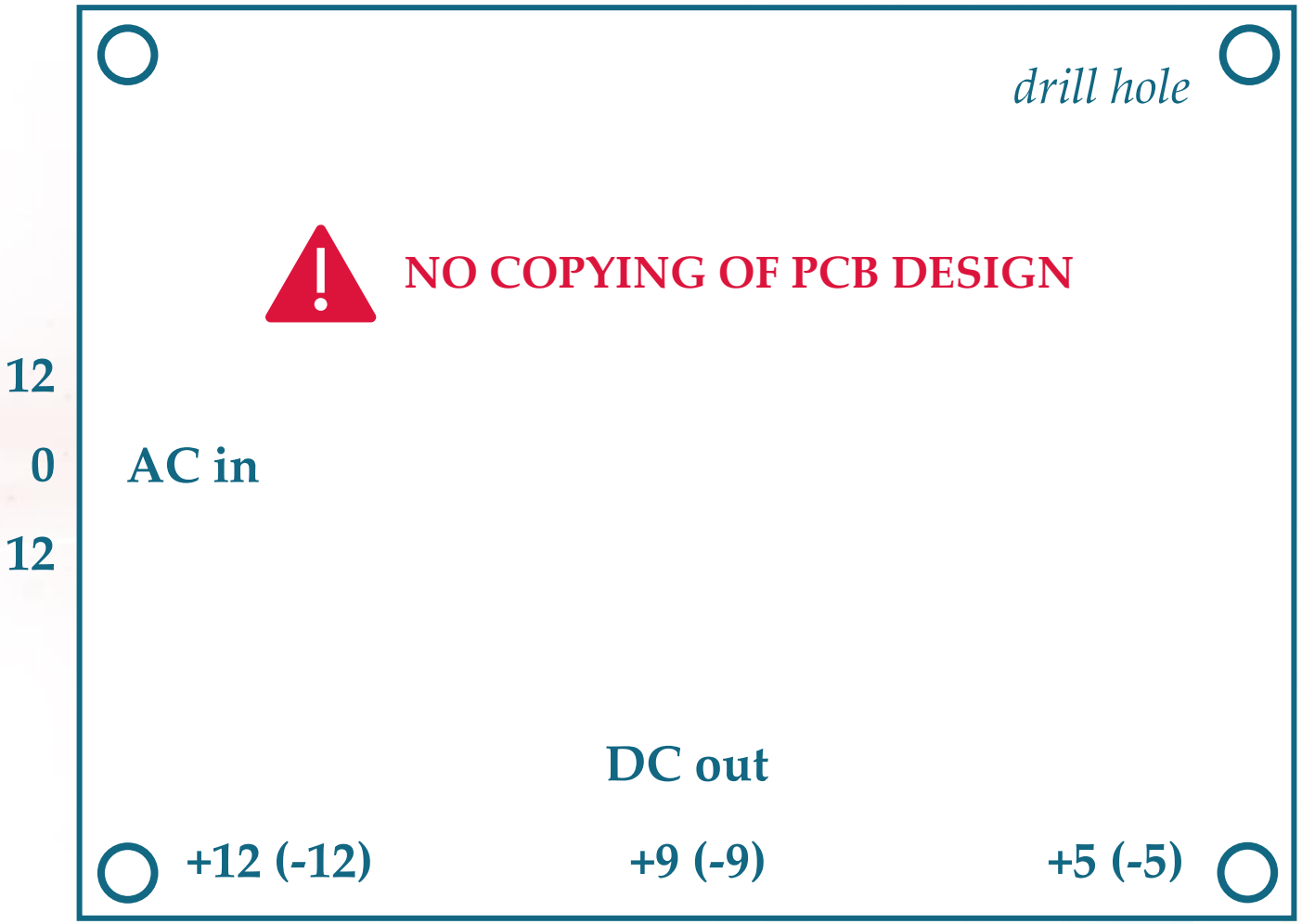
drill hole
NO COPYING OF PCB DESIGN
12
0
12
AC in
DC out
+12 (-12)
+9 (-9)
+5 (-5)

FOOTPRINT

Component	Footprint
Diode	1N4001
Voltage Regulator	78/79XX CT
Connector	HDR1X3
Capacitor 1000uF	CAPPR750-1600x3150
Capacitor 100uF	CAPPR500-1250x2500
Capacitor 10uF/1uF	CAPPR350-800x1150
Resistor	RES1300-700x250

Note:

Download datasheet of 78XX and 79XX IC

TESTING PROCEDURE

MOUNT THE RECTIFIER BLOCK

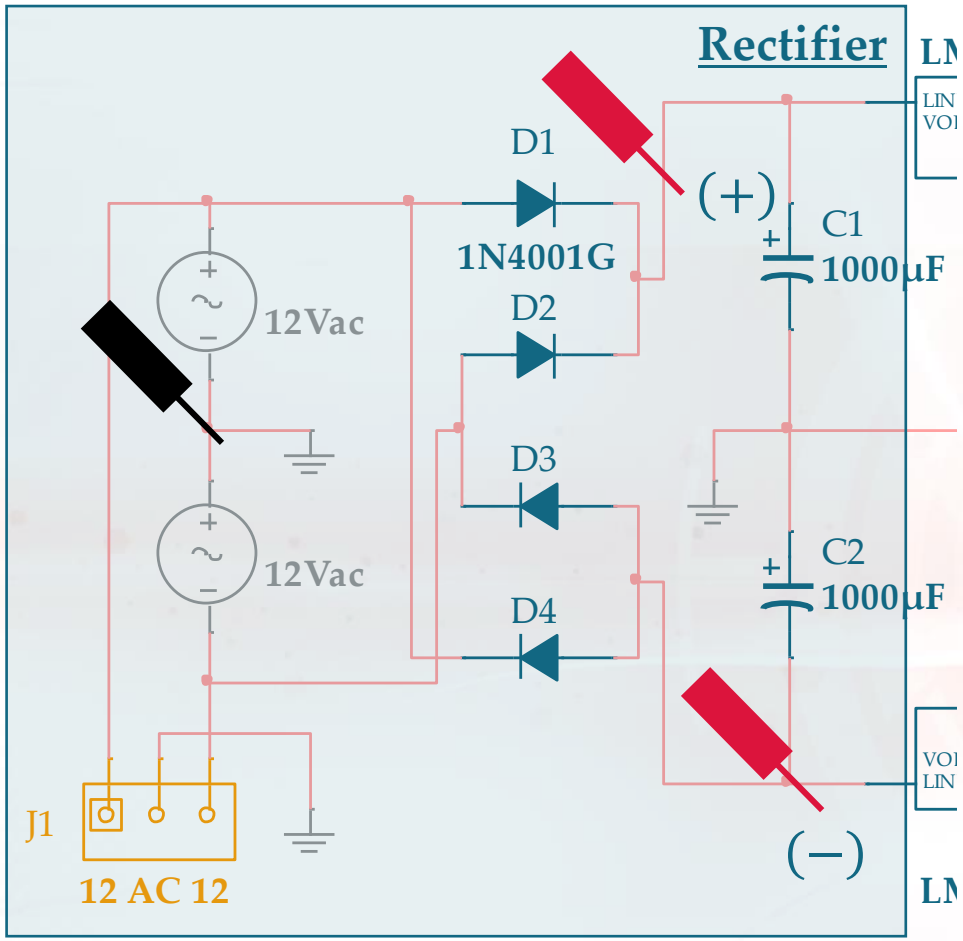

1) Mount the **4 diodes**

   note: **DO NOT** mount the capacitors

2) Capture the positive and negative output **waveform**

3) Mount the 2 capacitors **(100 uF)**

4) Capture the positive and negative output **waveform**

5) Measure the positive and negative output **voltage**

MOUNT THE 12V REGULATOR BLOCK

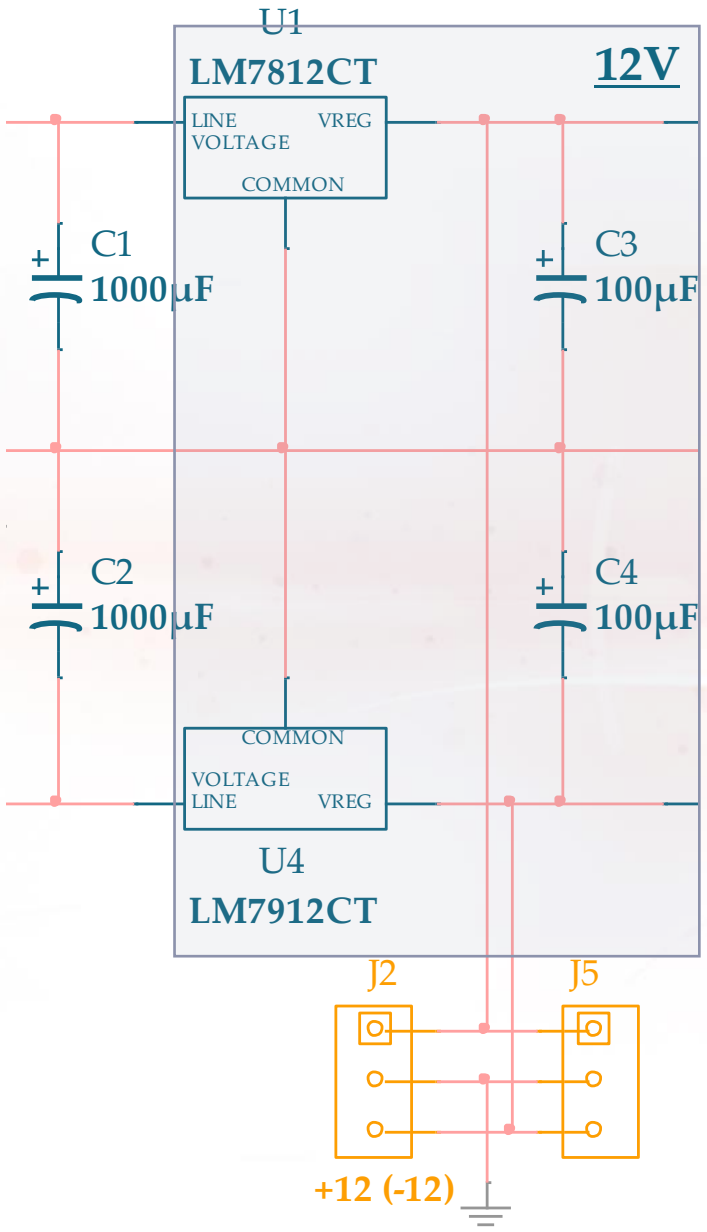

1) Mount the **7812** regulator

   Expected output: **positive 12V**

2) Mount the **7912** regulator

   Expected output: **negative 12V**

3) Mount the 2 capacitors **(100 uF)**

4) Recheck the **+12V** and **-12V** output

MOUNT THE 9V REGULATOR BLOCK

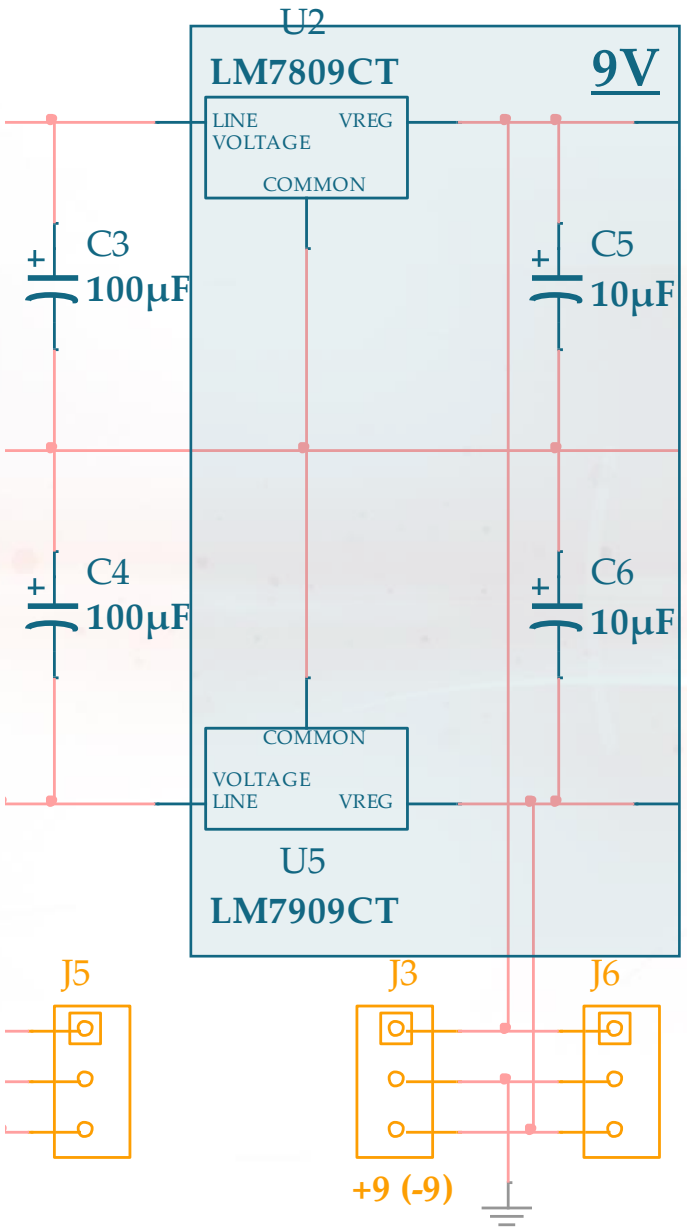

1) Mount the **7809** regulator

   Expected output: **positive 9V**

2) Mount the **7909** regulator

   Expected output: **negative 9V**

3) Mount the 2 capacitors **(10 uF)**

4) Recheck the **+9V** and **-9V** output

MOUNT THE 5V REGULATOR BLOCK

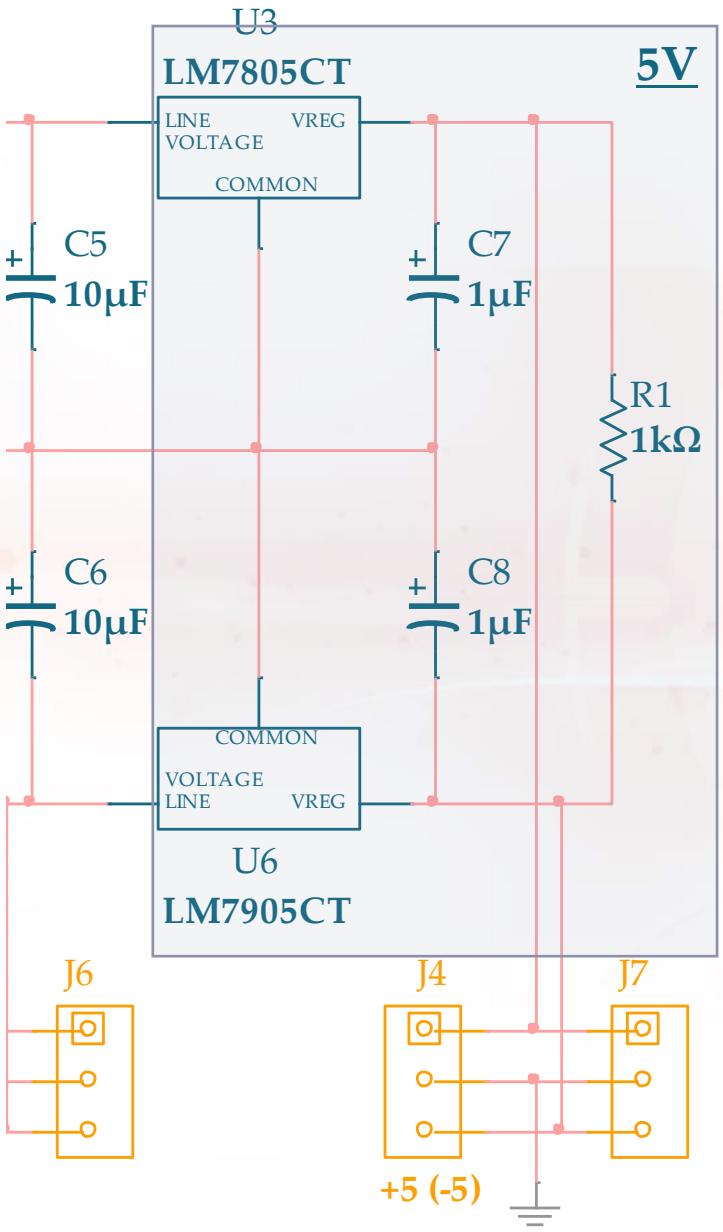

1) Mount the **7805** regulator

   Expected output: **positive 5V**

2) Mount the **7905** regulator

   Expected output: **negative 5V**

3) Mount the 2 capacitors **(1 uF)**

4) Recheck the **+5V** and **-5V** output

LABORATORY